Design Patrick Norguet

COLLECTION COMPONENTS
Dining armchair / Barstool

Nicolette

FSC™ certified product

Material

M44 / Metal Textured matt Warmgrey

M43 / Metal Textured matt Warmwhite

M51 / Metal Coffee Brown

M38 / Metal Olive Green

MG / Metal Textured matt Dark Grey

M48 / Metal Sepia Black

MR / Metal Textured matt Warmred

T1 / Natural Teak

Fabrics - Designer selection

A25 / Acrylic Nature White [A]

A24 / Acrylic Nature Grey [A]

A28 / Acrylic Black Stone [A]

Rain cover

Rain Cover / Ethi-Care [A]

Fabric categories

A — [A] / Category A

B — [B] / Category B

C — [C] / Category C

D — [D] / Category D

Nicolette

Dining armchair

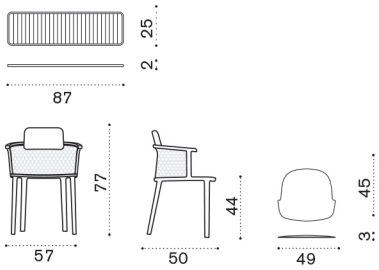

→ 8,5 | 1 box 61X90X73H 24 Kg → 2

Item	Description
NIPDD43T1	Alu. warmwhite + teak
NIPDD44T1	Alu. warmgrey + teak
NIPDDGT1	Alu. dark grey + teak
NIPDD48T1	Alu. sepia black + teak
NIPDD51T1	Alu. coffee brown + teak
NIPDD38T1	Alu. olive green + teak
NIPDDRT1	Alu. warmred + teak
NICUPDSBAW25	Soft back, nature white
NICUPDSBAW24	Soft back, nature grey
NICUPDSBAW28	Soft back, black stone
NICUPDAW25	Cushion, seat, nature white
NICUPDAW24	Cushion, seat, nature grey
NICUPDAW28	Cushion, seat, black stone
NICUPD[A]	Cushion, seat, Fab[A]
NICUPD[B]	Cushion, seat, Fab[B]
NICUPD[C]	Cushion, seat, Fab[C]
NICUPD[D]	Cushion, seat, Fab[D]
COVER206	Rain cover 58 x 51 h76

Barstool

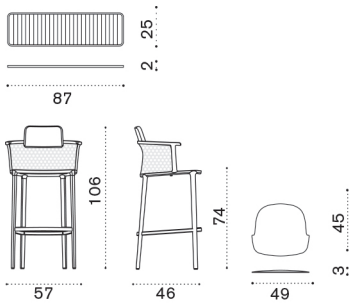

→ 11 | 1 box 62X76X121H 32 Kg → 2

NISGD43T1	Alu. warmwhite + teak
NISGD44T1	Alu. warmgrey + teak
NISGDGT1	Alu. dark grey + teak
NISGD48T1	Alu. sepia black + teak
NISGD51T1	Alu. coffee brown + teak
NISGD38T1	Alu. olive green + teak
NISGDRT1	Alu. warmred + teak
NICUPDSBAW25	Soft back, nature white
NICUPDSBAW24	Soft back, nature grey
NICUPDSBAW28	Soft back, black stone
NICUPDAW25	Cushion, seat, nature white
NICUPDAW24	Cushion, seat, nature grey
NICUPDAW28	Cushion, seat, black stone
NICUPD[A]	Cushion, seat, Fab[A]
NICUPD[B]	Cushion, seat, Fab[B]
NICUPD[C]	Cushion, seat, Fab[C]
NICUPD[D]	Cushion, seat, Fab[D]
COVER401	Rain cover 60 x 50 h103